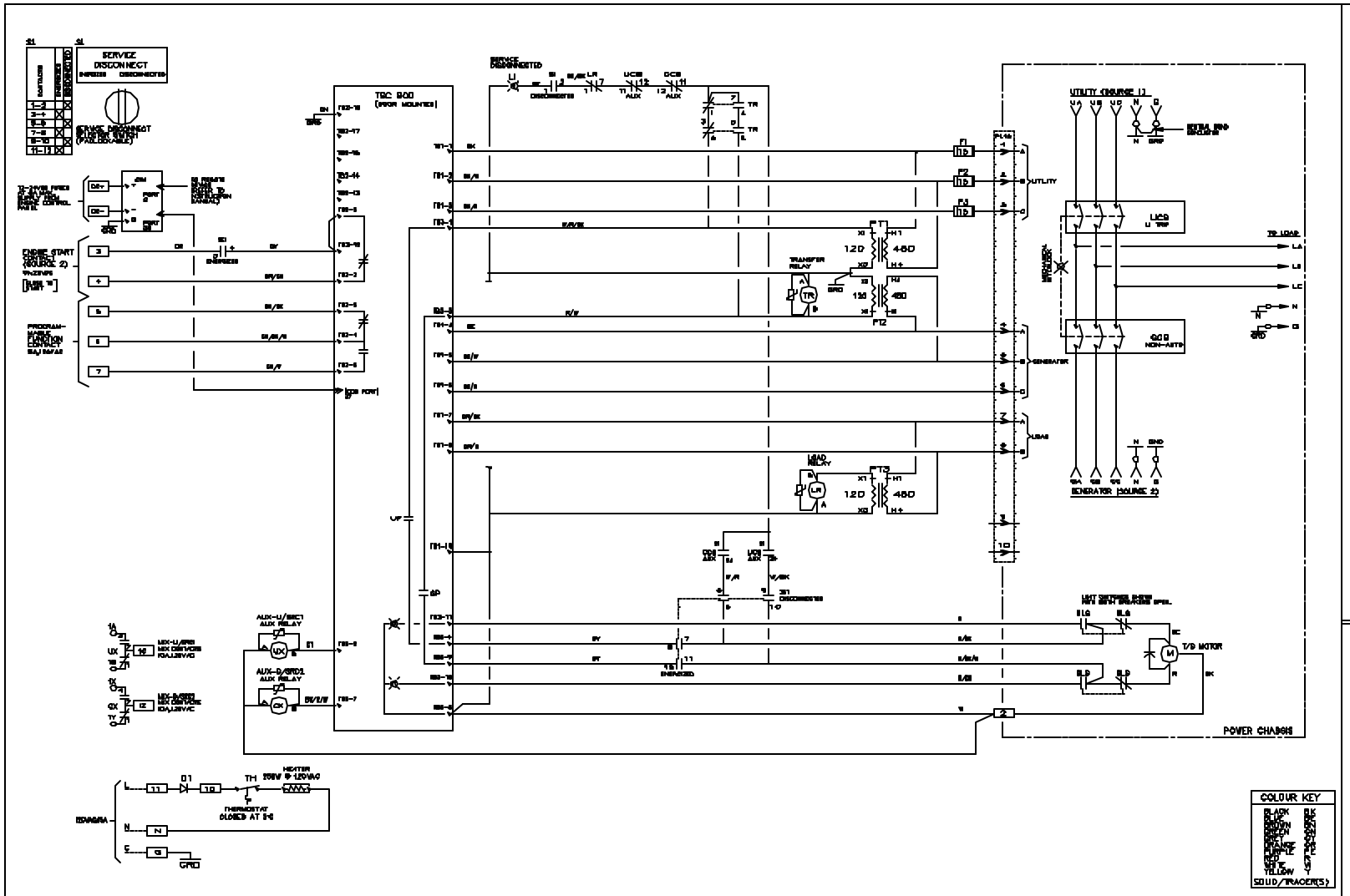

FOR TSC800 CONTROLLER OPTIONS, REFER TO PROGRAMMING SHEETS

1. SYSTEM MUST UTILIZE A SOLIDLY GROUNDED NEUTRAL
2. INTERRUPT RATING – 50KA @ 480V

☐ APPROVED FOR CONSTRUCTION
☐ MASTER COPY ☐ REFERENCE COPY ____ OF ____
☐ MULTIPLE UNIT WORK ORDER
☐ RELEASED FOR INFORMATION
AUTH. BY: ____ DATE: ____

DRAWING No.	REFERENCE DRAWINGS	No.	REVISIONS	BY	AUTH	DATE

THOMPSON TECHNOLOGY INDUSTRIES

AUTOMATIC SERVICE ENTRANCE
MODEL TS 853–TS6–800B–480–SE
SCHEMATIC DIAGRAM
800A, 480V, 3W, 4W, 60Hz

CUSTOMER: PERMEAT POWER SYSTEMS

DRAWN BY	DATE OF	DATE	REV
CG	SH	04-06-28	0

DRAWING/FILE No.: W-026754-02 SHEET 2/2

THE INFORMATION ON THIS DRAWING IS THE PROPERTY OF THOMPSON TECHNOLOGY. IT IS NOT TO BE USED EXPENSIVELY TO ANY THIRD PARTY.